XTR SERIES PNEUMATIC WRENCH OPERATION AND MAINTENANCE INSTRUCTIONS

Maintenance and Operation Manual For Roark Tools XTR Pneumatic Torque Wrenches.

Notice

Roark Tools XTR Series Pneumatic Wrenches are designed for installing and removing thread fasteners requiring accurate high torque during bolt installation and breakout.

Roark Tools is not responsible for customer modification of tools for applications on which Roark Tools was not consulted.

Warning

IMPORTANT SAFETY INFORMATION ENCLOSED.
READ THIS MANUAL BEFORE OPERATING TOOL.
IT IS THE RESPONSIBILITY OF THE EMPLOYER TO PLACE THE INFORMATION IN THIS MANUAL INTO THE HANDS OF THE OPERATOR.
FAILURE TO OBSERVE THE FOLLOWING WARNINGS COULD RESULT IN INJURY.
The Raptor tools contain alloy components which may cause a hazard in certain explosive environments.

General Description of Roark Tools XTR Series Pneumatic Torque Wrenches

Torque can be adjusted by regulating the amount of airflow to the torque wrench and by manipulating the air pressure regulating valve at the Filter/Regulator/Lubricator Unit. On top, an airflow volume control is incorporated at the machine providing an extended torque range. The accuracy of maintaining a selected torque is subject to the stability of your air supply. An airflow of 25 to 40 SCFM guarantees optimum performance even within a non-protected working environment.

The XTR Series Pneumatic Torque Wrench provides torque settings of up to 5,000 FtLbs. clockwise and counter clockwise rotation, random positioning of the tool due to its free joint execution.

Notice

The use of other than genuine RoarkTools replacement parts may result in safety hazards, decreased tool performance, and increased maintenance, and may invalidate all warranties.

Repairs should be made only by authorized personnel. Consult your nearest Roark Tools Authorized Service center. Refer all communications to the Nearest Roark Tools Office or Distributor.

Warning

FAILURE TO OBSERVE THE FOLLOWING WARNINGS COULD RESULT IN INJURY

USING THE TOOL

- **Keep Hands, loose clothing and long hair away from the reaction arm and working area during operation.**
- **This tool will exert a strong reaction force. Use proper mechanical support and correct reaction arm positioning to control these forces. Do not position the reaction arm so that it tilts the tool off the axis of the bolt.**
- **Avoid sharp bends and kinks that will cause server back-up pressure in hoses and lead to premature hose failure.**
- **Use only accessories recommended by Roark Tools.**
- **Use only sockets Industrial Impact Sockets and Accessories.**
- **Use only sockets and accessories that correctly fit the bolt or nut and function without tilting the tool off the axis of the bolt.**
- **This tool is not insulated against electric shock.**
- **This equipment must not be operated or services unless the operator has read the operating instructions and fully understands the purpose, consequences and procedures.**

Always turn off the air and disconnect the fitting before installing, removing, or adjusting any accessory on this tool, or before performing any maintenance on this tool.

Do NOT exceed Maximum Pressure. See Torque Chart. Damage May Occur.

Always wear ear protection when operating this tool.

Always wear eye protection when operating or performing maintenance on this tool.

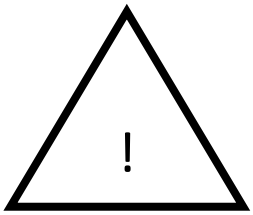

Do not use damaged, frayed or deteriorated air/pneumatic hoses and fittings.

Keep body stance balanced and firm. Do not overreach when operating this tool.

The Torque Reaction Arm must be positioned against a positive stop. Do not use the Arm as a dead handle. Take all precautions to make certain the operator's hand cannot be pinched between the Arm and a solid object.

Do not carry the tool by the hose.

Warning

Operation of the Equipment in Accordance with Specified Use

Depending on the working environment and how the XTR Series Pneumatic Torque Wrench is used, local health and safety regulations may require you protective gear (i.e. Ear Protection, Safety Shoes, Hard Hat, Gloves, Coveralls, etc.) In case external forces are exerted on the equipment, non-compliance with these regulations may result in injury. EAR PROTECTION MUST BE WORN WHEN OPERATING THIS TOOL. When in continuous use the grip casing will cool down considerably – operator should wear protective-working gloves as a consequence.

Operation of the Equipment in Accordance with Specified Use – Con't

1. Inspect, maintain, operate and install the tool in accordance with all applicable standards and regulations (local, state, country, federal, etc.)
2. Do not remove any labels. Replace any damaged labels immediately.
3. Always use clean, dry air at 90 p.s.i.g. (6.2 bar/620kPa) maximum air pressure at the inlet. Higher pressure may result in hazardous situations including excessive speed, rupture, or incorrect output torque or force.
4. Be sure all hoses and fittings are the correct size and tightly secured.
5. Ensure an accessible emergency shut off valve has been installed in the air supply line, and make others aware of its location.
6. Install a properly sized safety air fuse upstream of hose and use an anti-whip device across any hose coupling without internal shut-off, to prevent hose whipping if a hose fails or coupling disconnects.
7. Do not use damaged, frayed or deteriorated air hoses and fittings. Do not paint hoses.
8. Keep clear of whipping air hoses. Shut off the air compressor before approaching a whipping hose.
9. Always turn off the air supply, bleed the air pressure and disconnect the air supply hose before installing, removing or adjusting any accessory on this tool, or before performing any maintenance on this tool or any accessory.
10. Do not lubricate tools with flammable or volatile liquids such as kerosene, diesel or jet fuel. Use only TorcUP recommended lubricants.
11. Use only proper cleaning solvents to clean parts. Use only cleaning solvents which meet current safety and health standards. Use cleaning solvents in a well ventilated area.
12. Keep work area clean, uncluttered, ventilated and illuminated.

Safety Information When Using The Tool

1. When wearing gloves always be sure that the gloves will not prevent the throttle mechanism from being released.
2. Always wear eye protection when operating or performing maintenance on this tool.
3. Always wear hearing protection when operating this tool.
4. Always use Personal Protective Equipment appropriate to the tool used and material worked. This may include dust mask or other breathing apparatus, safety glasses, ear plugs, gloves, apron, safety shoes, hard hat and other equipment.
5. Prevent exposure and breathing of harmful dust and particles created by the tool use.
    a. Some dust created by power sanding, sawing, grinding, drilling, and other construction activities contains chemicals known to cause cancer, birth defects or other reproductive harm. Some examples of these chemicals are:
        I. Lead from based paints
        II. Crystalline silica from bricks and cement and other masonry products
        III. Arsenic and chromium from chemically treated lumber

    Your risk from these exposures varies, depending on how often you do this type of work. To reduce your exposure to these chemicals: work in a well ventilated area, and work with approved safety equipment, such as dust masks that are specially designed to filter out microscopic particles.
6. Keep others a safe distance from your work area, or ensure they use appropriate Personal Protective Equipment.
7. Be aware of buried, hidden or other hazards in your work environment. Do not contact or damage cords, conduits, pipes, or hoses that may contain electrical wires, explosive gases or harmful liquids.
8. Keep hands, loose clothing, long hair and jewelry away from working end of tool.
9. Power tools can vibrate in use. Vibration, repetitive motions or uncomfortable positions may be harmful to your hands and arms. Stop using any tool if discomfort, tingling feeling or pain occurs. Seek medical advice before resuming.
10. Keep body stance balanced and firm. Do not overreach when operating this tool. Anticipate and be alert for sudden changes in motion, reaction torques, or forces during start up and operation.
11. DO NOT USE THIS TOOL WHEN TIRED, UNDER THE INFLUENCE OF MEDICATION, DRUGS OR ALCOHOL.
12. Never use a damaged or malfunctioning tool or accessory.
13. Do not modify the tools, safety devices or accessories.
14. Do not use this tool for purposes other than those recommended.
15. Never exceed rated RPM of tool.

PLACING THE TOOL IN SERVICE

1. Must ensure air line is not connected to tool before following the following steps.
2. Ensure the reaction arm is properly attached and secured to splined section on the torque tool.
3. Select your desired square drive size and bolt/nut AF size impact socket or hex-drive socket for use.
4. Secure impact socket on tool square drive with lock pin and securing safety BUNA-N (NITRILE) O-ring on socket.
5. Use a quality Filter/Lubricator/Regulator Unit that meets airflow requirements or use

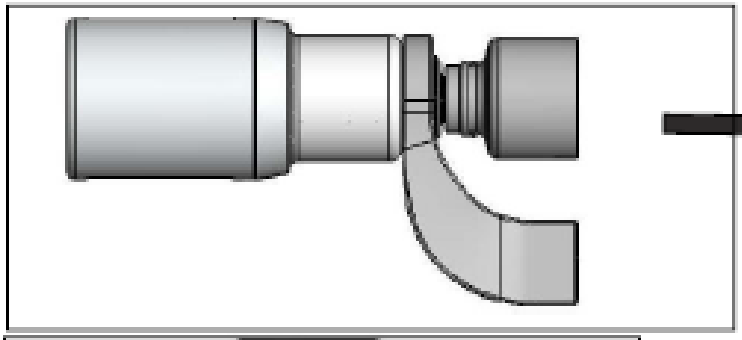

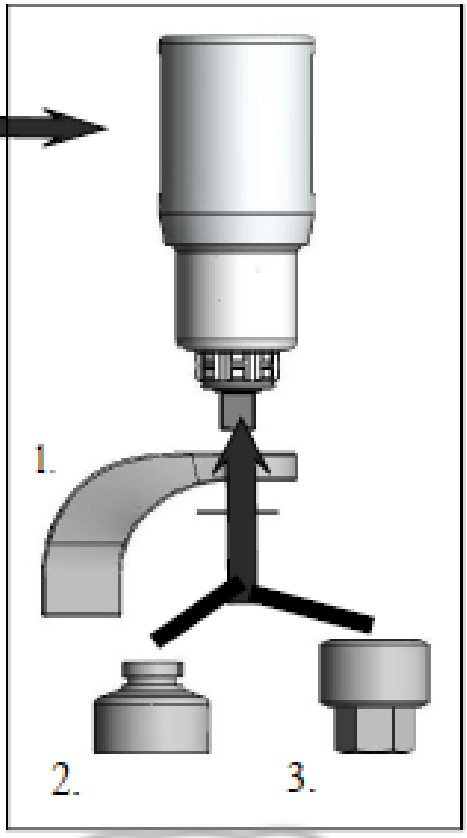

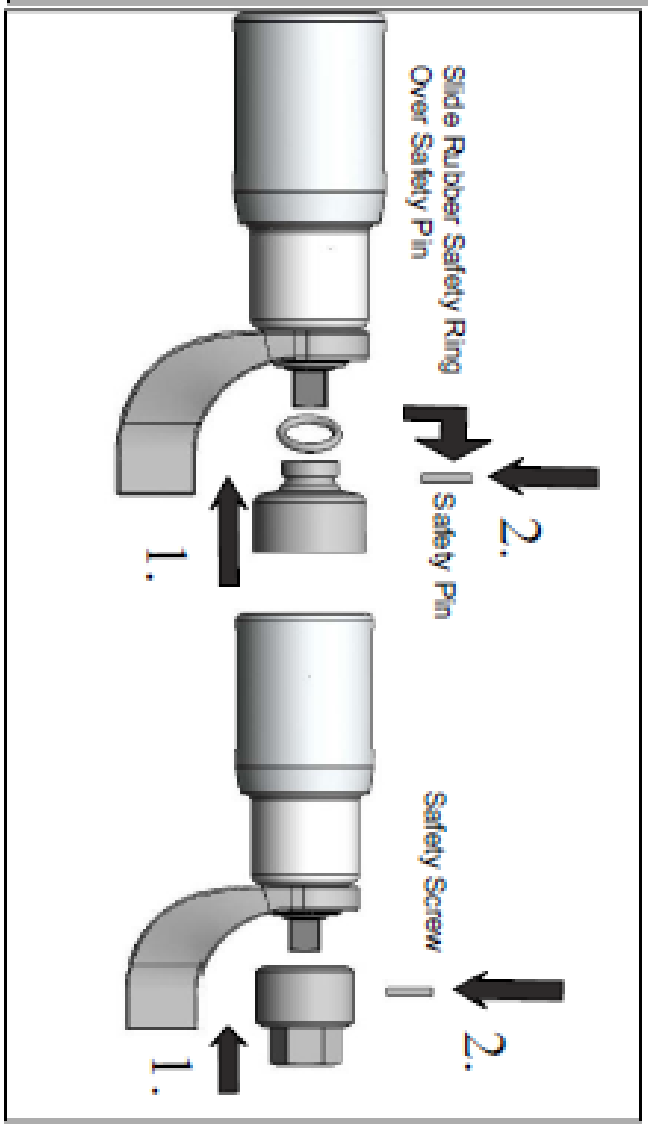

Important

For Long Life of the Air Motor, Use A Quality F/R/L Unit.

Make Sure Airflow Requirements are Met

Lubricator Provides Oil to Air Motor

Filter Serperates Water To Extend Life of Motor Vanes

An Air Pressure Regulator To Accurately Set Torque Settings

OPERATING PROCEDURES

Setting Torque on XTR Series Torque Wrenches

1. Torque depends on the air pressure exerted on the air motor under load. Adjusting the F/R/L Unit Regulator Knob initially sets torque. To decrease torque output turn regulator counter-clockwise to lower air flow/pressure. All XTR are shipped calibrated per ROARK TOOLS Procedures.

2. Check for Desired Torque Setting for your selected model on the supplied torque chart. On the XTR F/R/L, adjust air pressure by using the air regulator knob for desired pressure/torque. With the XTR Series Torque Wrench under load (not on the nut/bolt), press the toggle switch. Once pressure is set for desired torque output and airflow/pressure, push in on regulator knob to lock unit. While the XTR Series Torque Wrench is under load, running at free speed (not on the nut/bolt), adjust the XTR F/R/L pressure at the same time.

A. Setting torque for Bolt Tightening

1. Establish the air pressure required using the Torque Calibrated Chart. Provided with the tool.
2. Push Trigger using tightening Direction per A on below diagram.
3. Adjust the regulator until the correct pressure is shown on the gauge by turning adjustment knob clockwise.

B. Setting torque for Bolt Loosening

1. Establish maximum air pressure from the Torque Chart.
2. Push Trigger using loosening Direction per B on below diagram.
3. Set the air pressure the same as with tightening.

Notice

After extended use of the XTR Series Torque Wrench, Air Pressure Setting should be rechecked and may require minor adjustment. This is usually caused by variations in your air supply unit providing your airflow to F/R/L Unit or due to weather conditions.

Warning

Within the very first hours of operation a slight amount of grease may leak through the equipment casing. In this case remove excess to avoid risk of slipping while running the equipment or – for some specific applications – environmental pollution.

Important

In case of degrading performance or other apparent damage immediately send your XTR Series Torque Wrench to Roark Tools or contact your Local Representative or Distributor. Unit must be properly packaged for shipping.

Operating Procedures

Important

Unauthorized manipulation of air motor, valves, & F/R/L Unit or tampering with either will result in loss of warranty! Also for the life of your Roark Tools XTR Series Torque Wrench air supply should be clean and free of particles, water and other remains. Pollution of hose couplings or aggressive substances reaching air motor via the supply hose may cause damage to air motor vanes. Use approved F/R/L Units to obtained oil-enriched and filtered supply. Non-compliance with the specified operating air pressure will result in higher wear of the motor. Degradation in performance is likely to result. Also for extreme cold weather use approved cold weather pneumatic lubrication to prevent freeze ups

Warning

Beware of low-pressure air components. Do not fold or bend the supply hose excessively and check for damage before use. A damaged hose must not be used, as there is a risk of a hose burst. This may lead to a wildly lashing hose with a risk of personal injury. Also check air fitting and connections tightness or damage.

Tightening and Loosening of Nuts or Bolts

Warning

- *Beware of non fixed freely rotating Reactions Arms or of rotating impact sockets.*
- *Loose clothes, long hair, calbes, etc. are always to be kept away from danger/rotation area. When the machine is put into operation wearing ear protection, safety shoes and safety glasses is mandatory.*
- *Never Leave a running Pneumatic Torque Wrench unattended and always be ready to switch off the machine if necessary. Maintain a safe distance of an arms length.*
- *Always place the impact socket or hex driver snugly on the nut or bolt. Faulty nut or bolt connections may result in exceeding the mechanical stress limit of the material, causing it to break. Parts splintering off may cause bruises or even life-threatening injuries.*
- *Due to emission of an air-oil mixture, a breathing mask must be worn, especially wen working overhead in tight secluded spaces.*

During Tightening and Loosening of fasteners, always hold/position the XTR Series Torque Wrench perpendicular to fastener axis (in line with the fastener axis...or perpendicular to the nut/bolt head), since either the impact socket or hex driver and the nut/bolt to be worked on may be deformed or damaged otherwise. Furthermore a safe counter reaction point may not be achieved or cannot be guaranteed any longer. See Illustration on following page.

Notice

The indicated calibrated torque settings have to be considered only as a guideline. Because of variations in pressure and or mass flow of supply air as well as different screwing applications (soft/hard) deviations from the normative setting may occur. Due to the CFM required when the tool is running at Free Speed, it may not be possible to set the regulator to the desired pressure due to air pressure drop off. The CFM requirement is lower once the tool is under load, so if this happens, set the regulator to the desired PSI without the tool running. Try tightening down the fastener and check the PSI when the tool stalls. If the tool stalls at the PSI setting, the desired torque has been reached. If it has stalled before, try adjusting regulator higher until the correct stall PSI is reached.

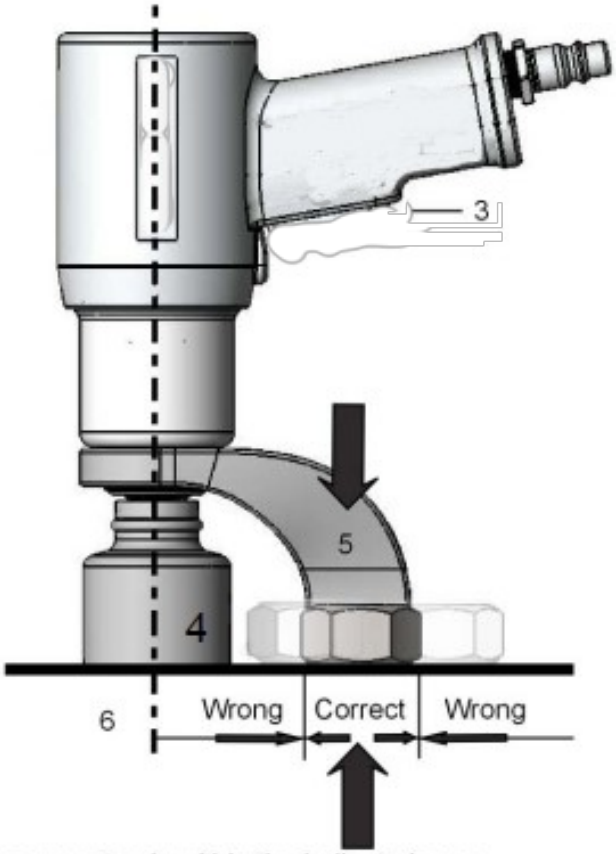

Safe support only within the indicated area

Because of the high mechanical stress on the XTR air motor it is essential to provide the F/R/L Unit with sufficient oil supply. Non-compliance risks the damage of the vanes of the air motor. Enriching the supply by adjusting the oil feed on the F/R/L to 2 to 3 drops per minute will suffice for heavy continuous equipment use.

1. Place your XTR Series Torque wrench completely over and on the fastener to be tightened or loosened. (4)
2. Ensure the reaction area / moment is taken up by the Reaction arm (5). Also ensure reaction is stable and will support counter torque.
3. Hold XTR Series Torque Wrench perpendicular to fastener axis (6) for the complete duration of rotation process for tightening or loosening.
4. After depressing the trigger (3) on the piston grip, when tightening the fastener the Tool will rotate until it becomes torqued and the XTR Series Torque Wrench Will then Stall Out
5. The direction will then need to be switched by pressing counter clockwise button on back of air motor. Then the trigger will need to be pressing the trigger to release counter torque load off off the reaction arm. Once this is done you can move the wrench to the next fastener.

6. For loosening a fasterner, the unit will continue to rotate until the fastener is removed or when fastener is loose by hand you can stop and move to next fastener.

7. Continue the process for tightening and loosening for each fastener you require.

8. If torque requirements require your application to go in torque increments, then set the XTR Series Torque Wrench to your first Torque Requirement. Tighten fastener as per your required tightening bolt sequence. Then reset for next setting on F/R/L unit by adjusting regulating knob.

9. Your personnel can be trained by your Roark Tools Representative or Distributor on use of this product if so desired.

Changing Accessories on the XTR Series Torque Wrench

1. Remove XTR Series from work and back off the regulator knob to decrease the pressure to zero while depressing toggle switch.
2. Disconnect the air hose to the XTR Series Torque Wrench.
3. Remove and change socket or accessory adaptor for next project. Insure socket or accessory is properly secured to square drive the locking pin and safety securing the o-ring.

.

Warning

Beware of components under pressure. Inadvertent activation of the torque wrench may lead to both a risk of injury as well as damage to property. When detaching the supply air hose always shut off air to supply first. Non-compliance with procedure may result in an out of control supply hose thus risking injury personal injury and damage to property

Storing Your RAPTOR Series Torque Wrench

1. Shut off pressurized air to the F/R/L by turning off the air to the F/R/L Unit.
2. Bleed off air by depressing trigger on Pistol Grip.
3. Disconnect Supply Hose to F/R/L and Disconnect air hose at XTR Series Motor.
4. If the XTR Series Torque Wrench is not to be used for an extended period of time, spray pneumatic lubricating oil into XTR Series Fitting. Reconnect air hose and supply of R/R/L Unit air Inlet Fitting. Cycle the XTR Series Unit momentarily to ensure good quality amount of lubricating has entered into air motor. Then stop and shut-off the system as previously mentioned above and store your XTR Series Torque Wrench in the case that it was shipped in.

Noise and Vibrations

Sound pressure level, measured in accordance OSHA & German Machinery Noise Information Leaflet-3-GSGV requirements dated 18 Jan 1991, §1, (1 e) at maximum equipment performance is just over 85 dB (A). In accordance with §1, (2) of the same leaflet sound pressure levels were measured for different work cycles, with the sensor at a distance of 1 meter to the geometric center of the machine. Vibrations become moderate just prior reaching the pre-set torque value. On request XTR Series Pneumatic Torque Wrenches with lower sound pressure levels (<85 dB(A)) are available as a special modification. Because this modification comprises a sound absorber, relevant torque values and rpm speed may change on given unit.

Notice

SAVE THESE INSTRUCTIONS. DO NOT DESTROY.